Instruction Manual for Power Distribution, Switchgear and Control Assembly - TBE Series

All work on this Ex-equipment must be carried out only by qualified specialist personnel following EN/IEC 60079-14. Any subsequent modification must be within framework of this operation manual

The operating permit expires in the event of non-compliance!

Contents

1.0 Safety Instructions

1.1 Safety notes

The target group of these instructions is electrical operatives and instructed staff following EN/IEC 60079-14.

- Operating permit expires in event of non-compliance.

Use the devices only for their intended purpose!

- We cannot be held liable for damage caused by incorrect or unauthorized use or by non-compliance with these operating instructions.
- Use the device only if it is undamaged.

Serious risk of injury!

- Only original parts supplied by ROSE are permissible for spares and repair work. Other spare parts can invalidate explosion protection.

The explosion group, temperature class and ambient temperature marked on the enclosure must be observed!

- Please look at marking on enclosure, it should be installed in zone, explosion group, T Class & ambient temperature for which they are suitable.
- We cannot be held liable for damage caused by incorrect selection.

Any unauthorized work on the device is prohibited!

- Installation, maintenance, overhaul and repair may only be carried out by appropriately authorized and trained personnel.

Repairs affecting the explosion protection must only be carried out by ROSE or a qualified authorized person in accordance with EN/IEC 60079-19!

Observe the following information during installation and operation

- Remove all foreign bodies (e.g. uncertified plugs for transportation) from enclosure.
- Any damage may compromise the explosion protection
- National and local safety regulation
- National and local accident prevention regulations
- National and local assembly and installation regulations
- Generally recognized technical regulations
- Safety notes in this instruction manual
- Characteristic values and related operating conditions on the rating plates and data plates
- Additional information plates on the device

1.2 Modification and alterations

Alteration and modifications to the device are not permitted!
Do not add terminals and components without consultation to manufacture.
Do not make additional cable or conduit entries.
We shall not take any liability or warranty obligations for damage resulting from alterations and modifications.

2.0 Standard Conformity

The equipment is tested and approved for explosion hazard area to
IEC 60079-0:2017 & EN IEC 60079-0:2018, IEC 60079-1:2014 & EN 60079-1:2014, IEC60079-31:2013 & EN 60079-31:2014, IEC 60529:2013 & EN 60529:1992/A2:2013standards and ATEX Directive 2014/34/EU.

The recognized national conditions and stipulation concerning electrical equipment in hazardous area must be considered while installing and operating explosion proof electrical equipment.

These enclosures can be used in hazardous area in Zones 1, 2, 21, 22.
They are not certified for Zone 0, 20.

3.0 Function

- These enclosures are used as Power Distribution, Switchgear and Control assembly. The protection technique allows using standard electrical products having arcing or sparking components inside enclosure. These electrical components are mounted & wired according to customer specification.
- Use the device for its intended purpose only!
- Otherwise, the manufacturer’s liability and warranty expires.
- Use the device under operating conditions described in instruction manual.
- The device can be used in areas subject to explosion hazards only according to this instruction manual.
- No changes to the device impairing their explosion protection are permitted.
- Install the device only if is undamaged, dry and clean.

4.0 Technical Data

Manufacturer:

ROSE Systemtechnik GmbH, Erbeweg 13-15, D-32457 Porta Westfalica, GERMANY

Explosion Protection:

IECEx Gas: Ex db IIC T6/T5/T4 Gb
Dust: Ex tb IIIC T85°C/T100°C/ T135°C Db

ATEX Gas: Ex II 2 G Ex db IIC T6/T5/T4 Gb
Dust: Ex II 2 G Ex tb IIIC T85°C/T100°C/ T135°C Db

IECEx Certificate of Conformity No: IECEx DEK 18.0075X

EU Type examination Certificate No: DEKRA18ATEX0119X

Electrical Data

Rated operation voltage: 1.1KV AC/DC (Declared voltage rating is nominal and item having higher Voltage rating may be populated as required)

TYPE NO	TBE 100T/ TBE 100TW	TBE 130T/ TBE 130TW	TBE 160T/ TBE 160TW
Max Rated Current	57 A	76 A	125 A
Max Terminal Size	10 mm2	16mm2	35 mm2
Max PE Conductor Size	10 mm2	16 mm2	16 mm2

Ambient Temperature

Enclosure without glass window: "-60°C /-20°C ≤ Ta ≤ +40°C/+55°C/+60°C/+75°C/+90°C/+110°C"

Enclosure with glass window: "-60°C /-20°C ≤ Ta ≤ +40°C/+55°C/+60°C/+75°C"

- Use equipment within ambient temperature marked on Ex label

Mechanical data

Enclosure: Marine grade copper free aluminum alloy or SS316L
O Ring: Silicone
Finish: RAL 7035
Earthing: 2Nos External and 1No Internal
Degree of protection: IP66 as per IEC 60529:2013 & EN 60529:1992+A2:2013
Installation: 2 mounting holes

Number, size & location of entries

Number, size & location of entries shall be in combination as required within max permissible limits in Metric as per ISO 965 or NPT as per ANSI/ASME B1.20.1 specified as under.

TYPE	M1	M2	M3	M4
	M20 or 1/2"NPT	M25 or 3/4"NPT	M32 or 1"NPT	M40 or 1.1/4"NPT
TBE 100T/ TBE 100TW	4	4	X	X
TBE 130T/ TBE 100TW	6	6	2	X
TBE 160T/ TBE 100TW	8	8	2	2

Note: Base of TBE 100T and TBE 100TW is common. Base for TBE 130T and TBE 130TW is common. Base for TBE 160T and TBE 160TW is common.

Marking

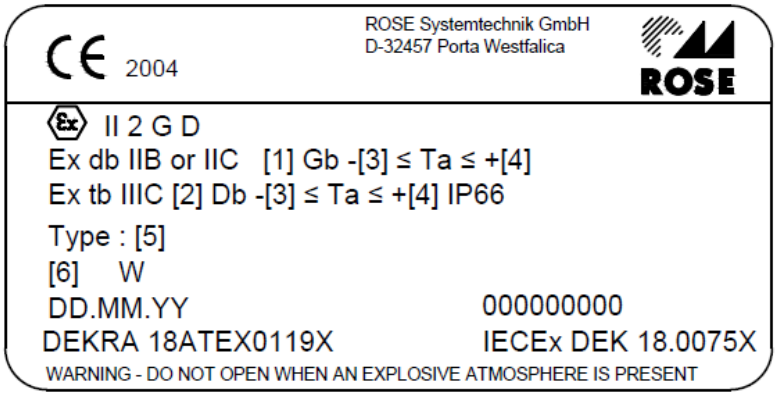

Note-: Equipment marking shall be completed by using type of protection i, [i], m for certified equipment or components used for assembly.

TYPE [5]	T Class [1]	T6		T5		T4		Min Ambient Temp [3]
	Dust Temp Marking [2]	T85°C		T100°C		T135°C		
	Max ambient temp [4]	+40°C	+60°C	+55°C	+75°C	+90°C	+110°C	
TBE 100T	Max Watt Dissipation [6]	20W	12W	20W	12W	20W	12W	-20°C or -60°C
TBE 100TW		20W	12W	20W	12W	X	X	
TBE 130T		29W	15W	29W	15W	29W	15W	
TBE 130TW		29W	15W	29W	15W	X	X	
TBE 160T		41W	24W	41W	24W	41W	24W	
TBE 160TW		41W	24W	41W	24W	X	X	

Note 1: TBE Enclosures with glass window are not suitable for T4 class.
Note 1: Name plate with gas or dust or dual gas & dust marking can be given as required.
Note 2: Name plate with IECEx or ATEX or dual IECEx & ATEX marking can be given as required.

Thread type i.e. Metric or NPT and size of threaded entry is marked on supplied enclosure by affixing a suitable sticker near each entry.

5.0 Installation

5.1 **Dimensional drawings** (All dimensions in mm) – subject to alterations

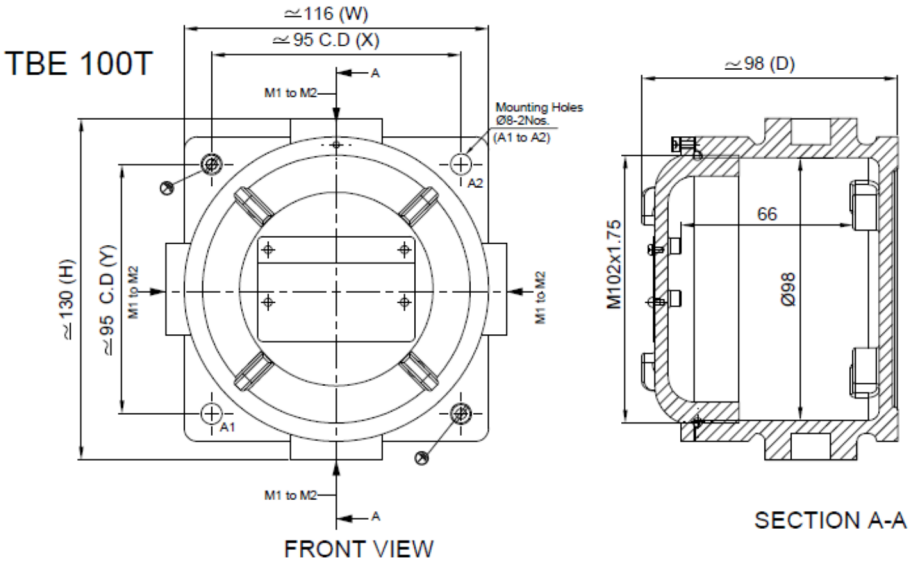

Weight in Al: 1.1 Kg Weight in SS: 3.0 Kg

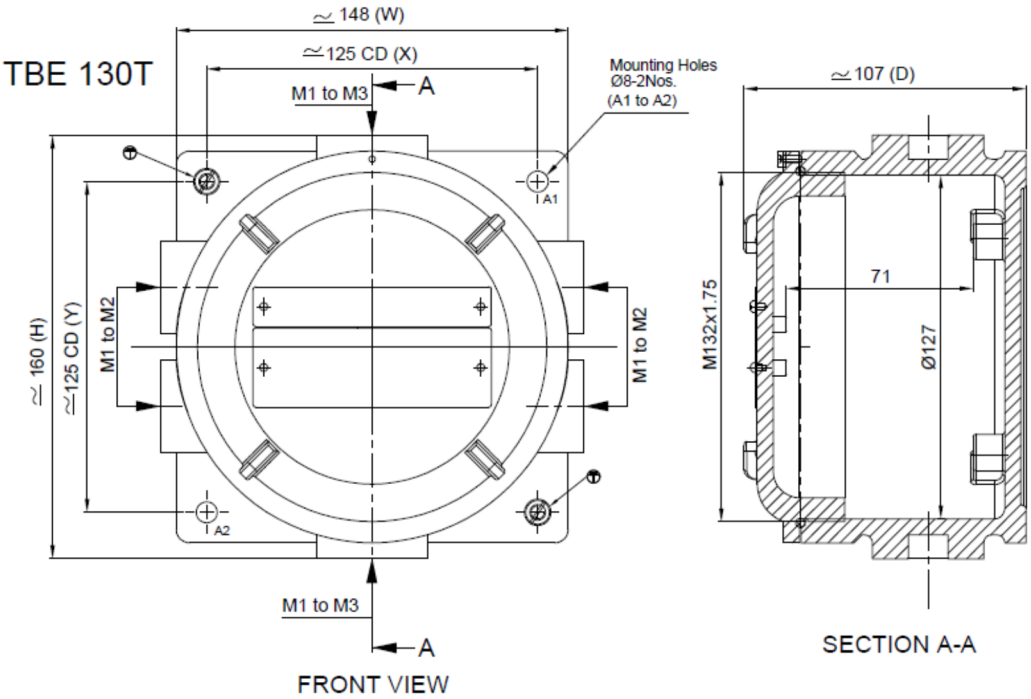

Weight in Al: 1.8 Kg Weight in SS: 5.2 Kg

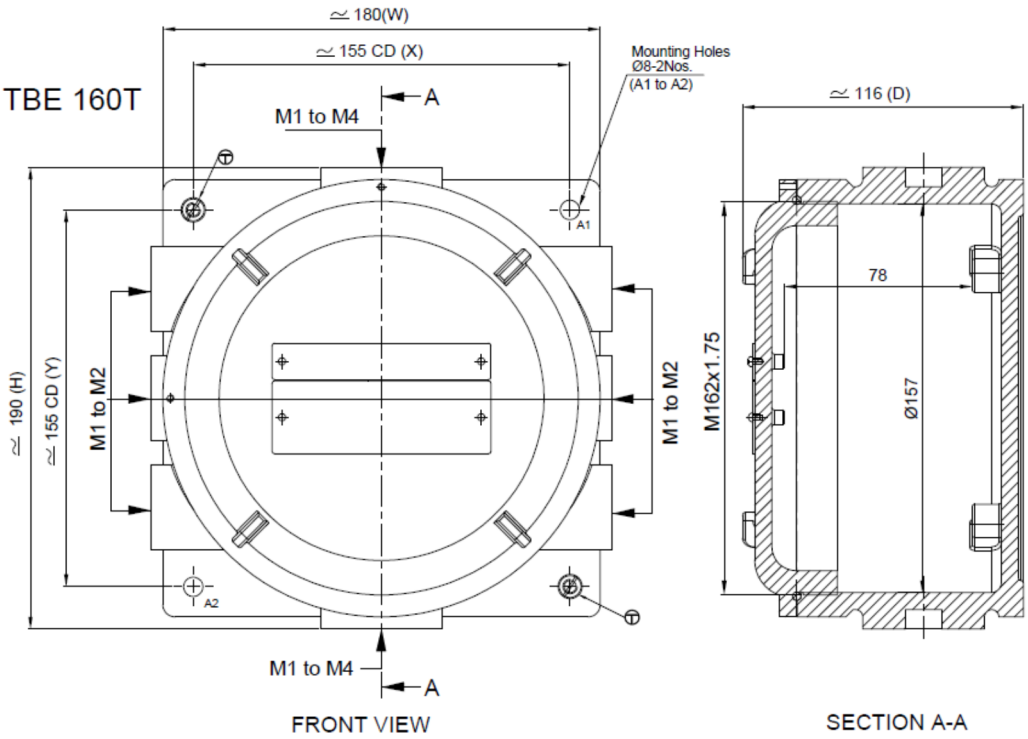

Weight in Al: 2.8 Kg Weight in SS: 8.4 Kg

5.2 Installation conditions

Built in components

The T Class for gas atmosphere and max surface temperature for dust atmosphere is dependent on power dissipation of components, wiring and Max ambient temperature. Refer Technical data.

Only replacement of components built inside the enclosure is permitted. Any addition or alternation without consultation to ROSE is not permitted and may lead to ignition risk. Replacement of display window is not possible.

5.3 Mounting and operating position

Mounting the enclosure

- Mount the enclosure in vertical position by using two screws. Refer dimensional drawing for mounting holes & mounting dimension.
- Tighten the mounting screws properly.

Unscrewing the enclosure LID

- Loosen the grub screw
- Unscrew the enclosure lid and put it safely.

Screwing down the enclosure LID

- To prevent corrosion the lid thread must be coated with silicone grease Anabond 662 or equivalent.
- Screw lid of enclosure carefully onto base of enclosure. Do not tilt the thread.
- Screw in threads all the way.
- Fasten the grub screw to lock the lid.

Danger due to not approved cable glands & accessories!

- Only certified cable glands & accessories of required Ex protection shall be used.
- Each entry shall have no more than one thread adopter. A blanking element shall not be used with a thread adopter.
- In case of non-compliance explosion protection can no longer be guaranteed.

Danger due to open holes or unused cable entries on the enclosure!

- If holes or unused cable entry is left open, explosion protection can no longer be guaranteed.
- Close open holes using stopping plugs approved for required type of protection.

5.4 Electrical Connection

Schematic drawing and terminal marking as applicable is provided as part of GAD for information.

Internal wiring

Incorrect wiring inside enclosure!

- Strictly adhere to wire size and length for which heat loss dissipation are taken into account for permissible wattage for a given T Class. In case of non-compliance explosion protection can no longer be guaranteed.
- Strictly adhere to the creepage and clearance required.
- Use only insulated wires of suitable voltage grade.
- Mounting rails or components must be loosened and fastened properly.

External Wiring

Danger due to improper cables!

- The cables must comply with IEC/EN 60079-14 and relevant regulation and must have the required cross section.
- Strictly adhere to cable size and length for which heat loss dissipation are taken into account for permissible wattage for a given T Class and ambient temperature.
- In case of non-compliance explosion protection can no longer be guaranteed.

Danger due to improper cable glands!

- The cable glands shall be appropriate to cable type and size and with suitable approval as per IEC/EN 60079-14.
- Entry threads have been marked on enclosure by sticker, please use cable gland of appropriate size and type.
- In case of non-compliance explosion protection can no longer be guaranteed.

Protective Earth conductor connection

Always connect the protective earth (PE) conductor!

- The device is equipped with one internal and two external protective conductor connection arrangements with SS Screw, 1 No. tooth (Anti-rotational) washer and 2 No. plain washers.
- Use ring type lug of suitable material and size to be affixed between 2 plain washers.
- The PE conductor size shall be min 4mm^2 and equal to max conductor size used upto 16mm^2 or 16mm^2 for conductor size of 35mm2 used.

6.0 Commissioning

Check the device before putting it into service!
To ensure proper operation the equipment must be checked prior to putting it in service.
If the enclosure is connected incorrectly, explosion protection is no longer guaranteed!
The device must be operated only with completely closed enclosures.

Before commissioning ensure that:

- No components are damaged.
- The equipment has been installed according to regulations.
- There are no foreign bodies inside the device.
- The specified tightening torques has been observed.

7.0 Inspection, Maintenance, Repair and Overhaul

7.1 Inspection and Maintenance:

- Consult the relevant national regulations (e.g. IEC/EN 60079-17) to determine the type and extent of inspections.
- Plan the intervals such that any expected defects are detected promptly.

Risk of Electric Shock!
Before opening the device, disconnect it from power supply and wait for some time to allow internal components to cool down.

7.2 Repair and Overhaul

Damaged enclosure cannot be repaired at site. Only electrical components, cable glands &accessories can be changed. Please follow IEC/EN 60079-19 for repair of damaged enclosure.

8.0 Specific conditions of use:

- The ambient temperature range depends on the model (with or without glass window), the pressure applied during the routine overpressure test and on the glass thickness. See instruction manual point no 4.
- For enclosures provided with a powder coating or liquid painting and intended for use in Group III applications, the user shall minimize the risk from electrostatic discharge by suitable selection and installation.
- The maximum number of apertures, their maximum sizes and their positions are specified in the instruction manual point no 4.
- The threaded flame path is more than required by IEC 60079-1. Contact ROSE for information on the dimensions of the flameproof joint.
- Refer to associated certificates of Ex components/ equipment used in assembly.
- Use cables and cable glands suitable for operating temperature referring to marking as per recommendation of IEC 60079-14.

9.0 Technical Support:

Contact ROSE Systemtechnik GmbH, Erbeweg 13-15, D-32457 Porta Westfalica, GERMANY for technical support.