INSTRUCTION MANUAL FOR CONFIGURATION OF EQUIPMENT FROM TBE SERIES EMPTY ENCLOSURES

1.0 TECHNICAL DATA

Manufacturer:

ROSE Systemtechnik GmbH
Erbeweg 13-15, D-32457 Porta Westfalica, GERMANY

Explosion Protection:

IECEx Gas: Ex db IIB Gb or Ex db IIC Gb
Dust: Ex tb IIIC Db

ATEX Gas: Ex II 2 G Ex db IIB Gb or Ex db IIC Gb
Dust: Ex II 2 G Ex tb IIIC Db

IECEx Certificate of Conformity No: IECEx DEK 18.0070U
EU Type examination Certificate No: DEKRA18ATEX0114U

Ambient Temperature
Enclosure without glass window: "-60°C /-20°C ≤ Ta ≤ +40°C/+55°C/+60°C/+75°C/+90°C/+110°C"
Enclosure with glass window: "-60°C /-20°C ≤ Ta ≤ +40°C/+55°C/+60°C/+75°C"
Note- Please use enclosure within ambient temperature marked.

Mechanical data
Enclosure: Marine grade copper free aluminium alloy or SS316L
O Ring: Silicone
Finish: RAL 7035
Degree of protection: IP66 as per IEC 60529:2013 & EN 60529:1992+A2:2013
Installation: 2 mounting holes

2.0 The enclosures may be configured as under to be covered under separate equipment certificate:

2.1 The Max watt dissipation, dust temp marking & T class is as under:

TYPE	T Class	T6		T5		T4		Min Ambient temp
	Dust Temp Marking	T85°C		T100°C		T135°C		
	Max ambient	+40°C	+60°C	+55°C	+75°C	+90°C	+110°C	
TBE 100T	Max Watt Dissipation	20W	12W	20W	12W	20W	12W	-20°C or -60°C
TBE 100TW		20W	12W	20W	12W	X	X	
TBE 130T		29W	15W	29W	15W	29W	15W	
TBE 130TW		29W	15W	29W	15W	X	X	
TBE 160T		41W	24W	41W	24W	41W	24W	
TBE 160TW		41W	24W	41W	24W	X	X	

Note: TBE Enclosures with glass windows are not suitable for T4 class.

2.2 Number, size & location of entries shall be in combination as required within max permissible limits in Metric as per ISO 965 or NPT as per ANSI/ASME B1.20.1 specified as under.

TYPE	M1	M2	M3	M4
	M20 or 1/2”NPT	M25 or 3/4”NPT	M32 or 1”NPT	M40 or 1.1/4”NPT
TBE 100T/ TBE 100TW	4	4	X	X
TBE 130T/ TBE 100TW	6	6	2	X
TBE 160T/ TBE 100TW	8	8	2	2

Note: Base of TBE 100T and TBE 100TW is common. Base for TBE 130T and TBE 130TW is common. Base for TBE 160T and TBE 160TW is common.

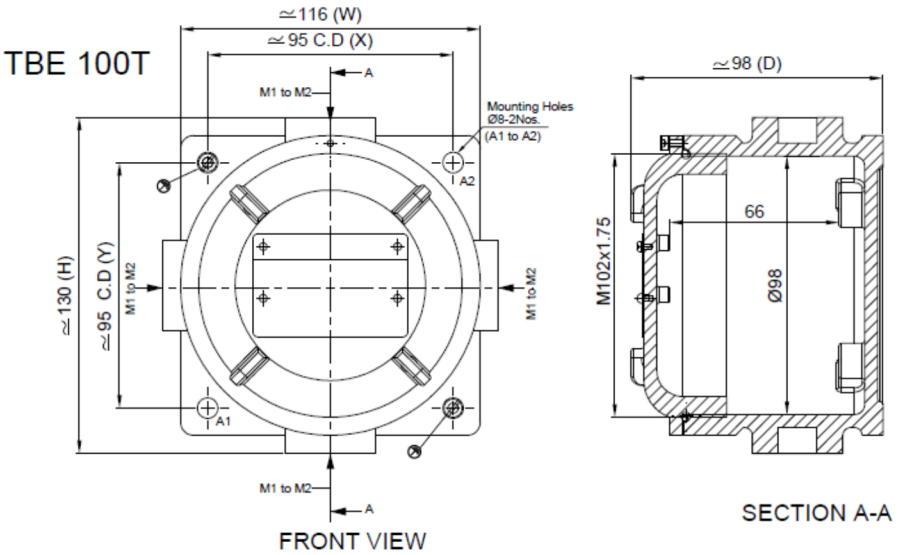

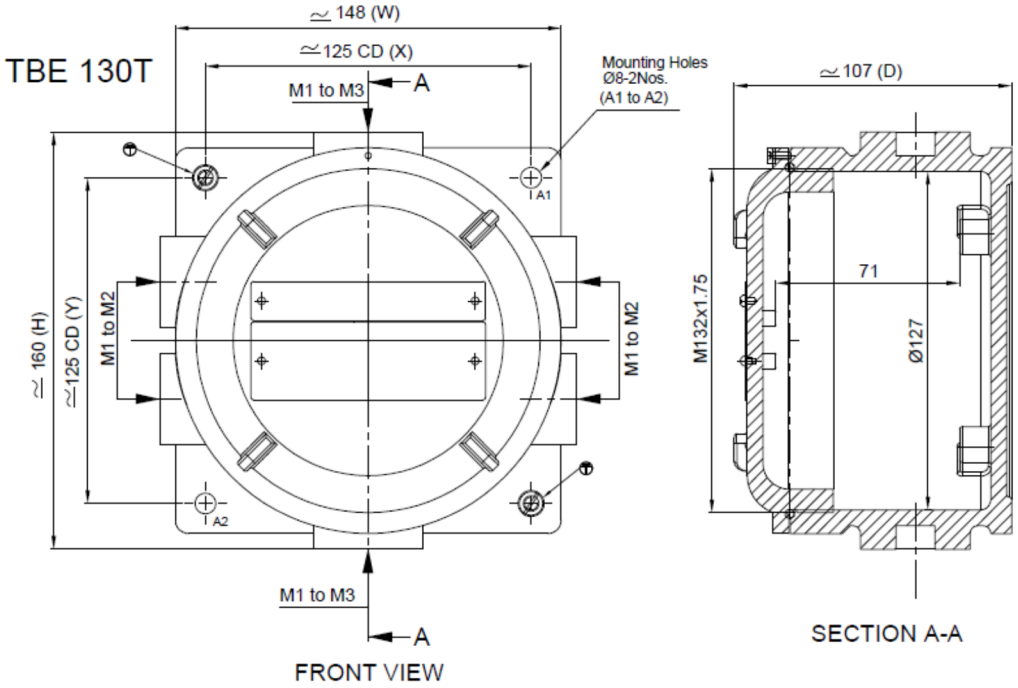

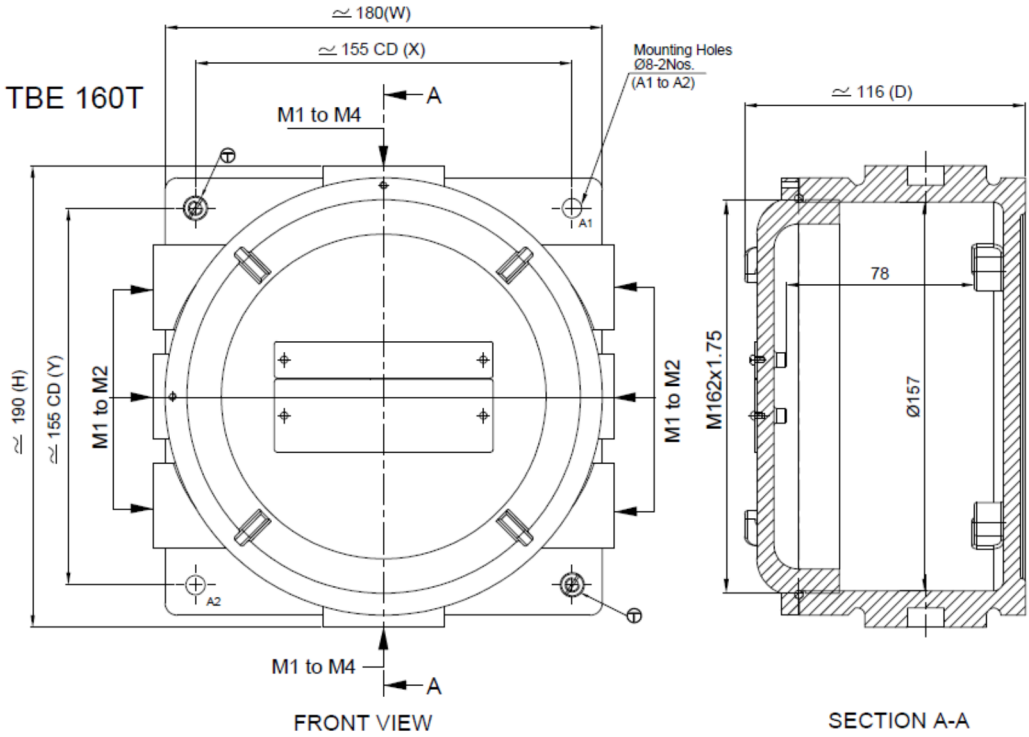

2.3 Enclosures may be used as control panel, terminal box for control, instrumentation, power and heat trace etc. or as component enclosures for housing electrical/ electronic power components (e.g. Contactor, transformer, relays, transducers, isolators, barriers, power supply, PCB etc.) of upto 1.1KV AC/DC or as required subject to watt loss and clearances within permissible limits. However, declared voltage rating is nominal and items having higher rating as required may be populated inside enclosure subject to required creepage and clearance and within permitted watt loss. When enclosures are populated with Intrinsically Safe (IS) Devices necessary clearance between IS & NON IS devices, wiring and terminals shall be maintained.

2.4 Enclosure may be populated with separately certified control components (various type of PB actuators, rotary actuator for Switch, MCB etc. and LED Indicating lamp) in required numbers & combination within permissible limits as under.

2.5 Lid may be populated with display window as under for Indicating or control instruments with display. Smaller size display window can be provided e.g. 50 Ø instead of 60 Ø without altering the thickness of glass.

The table related to 2.4 & 2.5 is as under:

Type	Window size	Glass Size		Cemented path	Glass holder size	Max no of control accessories
		Ta (-20°C)	Ta (-60°C)			
TBE 100TW	Φ 60	Φ 82x8	Φ 82x12	11	M86x1.5x6L	3
TBE 130TW	Φ 85	Φ 110x8	Φ 110x12	12.5	M114x1.5x6L	5
TBE 160TW	Φ 113	Φ 138x8	Φ 138x12	12.5	M142x1.5x6L	7

Note: Control accessories can be fitted in TBE 100T, TBE 130T and TBE 160T enclosure also.

2.6 Moulded terminals as per IEC, special terminals or bus-bar of suitable size & number in required combination can be located within enclosure subject to watt loss and clearances within permissible limit.

2.7 Enclosures shall be used within permissible watt dissipation as shown in 2.1 and they are within guideline of Annexure D of IEC 60079-1 i.e. required clearance shall be maintained in X, Y & Z planes.

3.0 MARKING

3.1 Enclosure is provided with Ex label for empty enclosure.

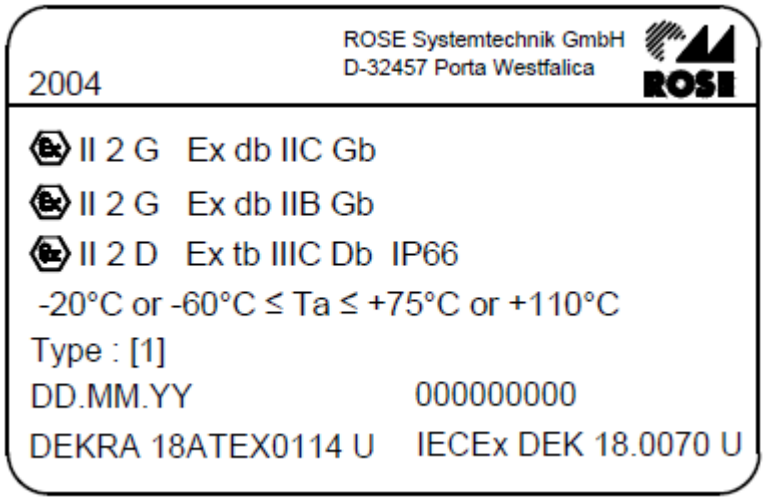

3.2 Thread type i.e. Metric or NPT and size of threaded entry is marked on supplied enclosure by affixing a suitable sticker near each entry.

4.0 SCHEDULE OF LIMITATIONS:

4.1 The ambient temperature range depends on the model (with or without glass window), the pressure applied during the routine overpressure test and on the glass thickness. See instruction manual point no 2.1 and 2.5.

4.2 For enclosures provided with a powder coating or liquid painting and intended for use in Group III applications, the user shall minimize the risk from electrostatic discharge by suitable selection and installation.

4.3 The maximum number of apertures, their maximum sizes and their positions are specified in the instruction manual point no 2.2

4.4 Oil-filled circuit-breakers and contactors shall not be used.

4.5 The content of the TBE enclosure may be placed in any arrangement provided that an area of at least 20 % (Group IIB) or 40 % (Group IIC) of each crosss-sectional area remains free. Separate relief areas may be aggregated provided that each area has a minimum dimension in any direction of 12.5 mm.

4.6 The threaded flame path of the cover is more than required by IEC 60079-1. Contact the manufacturer for information on the dimensions of the flameproof joints.